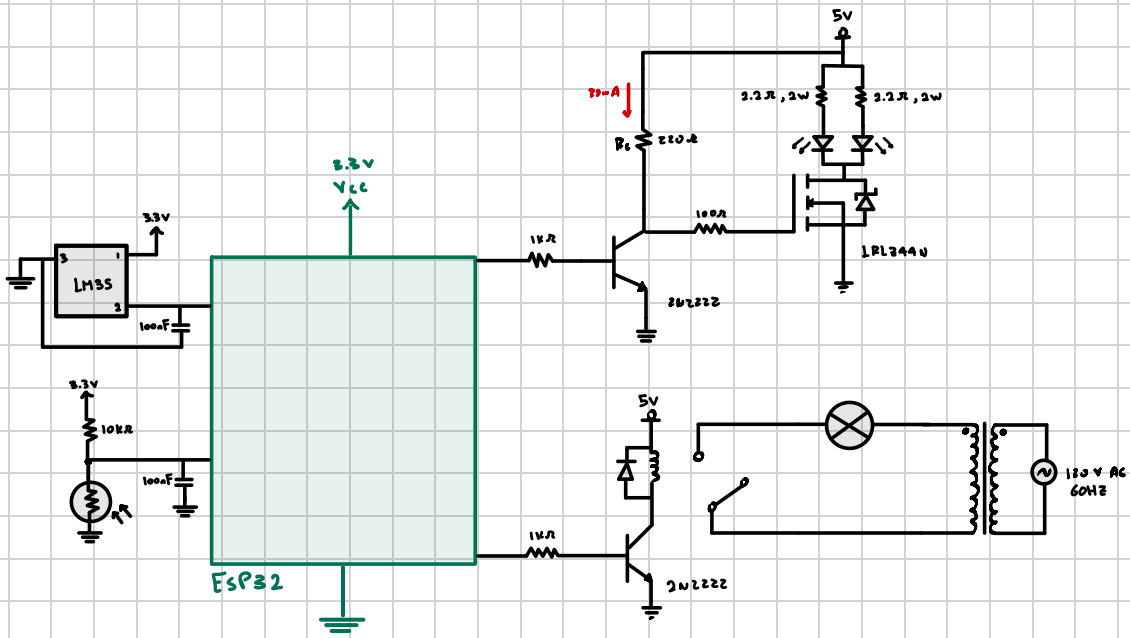

$3W / 3.2V = 937\ mA \longrightarrow$ (ish. led)

$R = \frac{(5V - 3.2V)}{0.9A} = 2\Omega \longrightarrow 2.2\Omega, 2W$

$I_c(sat) = 20\ mA$

$V_{cc} - V_{RC} - V_{CE} = 0$

$V_{cc} - I_{c(sat)} R_c - V_{CE} = 0$

$R_c = \frac{V_{cc} - V_{CE}}{I_{c(sat)}} = \frac{5V - 0.2V}{20\ mA}$
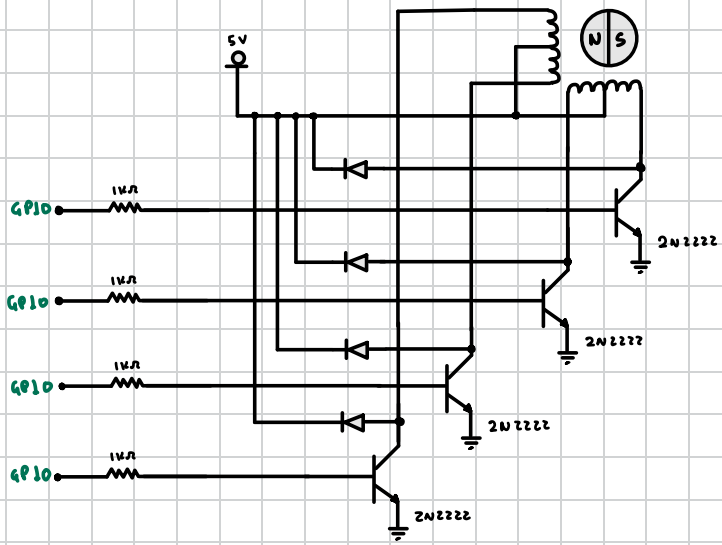
$\boxed{R_c = 240\Omega \approx 220\Omega}$